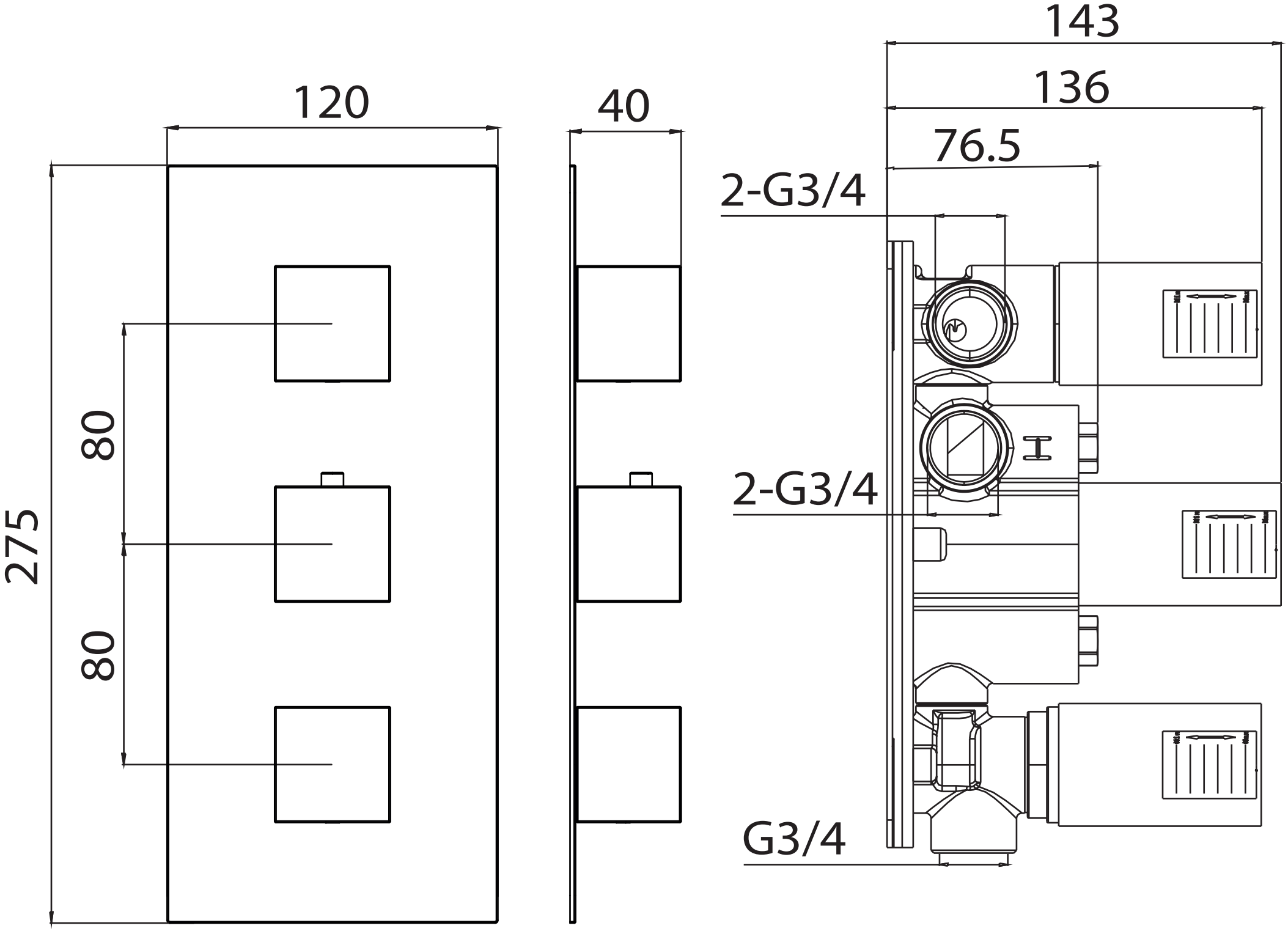
120
40
143
136
76.5
2-G3/4
2-G3/4
G3/4
275
80
80