Cloakroom Vanity

1x handle

1x handle bolt

4x shelf support

2x rubber pads

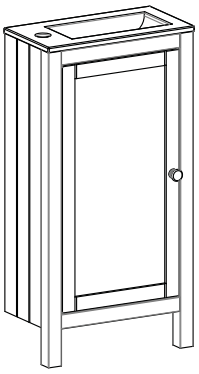

2

To attach the handle drill the door in the marked position using a suitable size drill bit, you may wish to place a piece of scrap wood behind where you are drilling to prevent break through.
Using the handle bolt provided attach the handle.

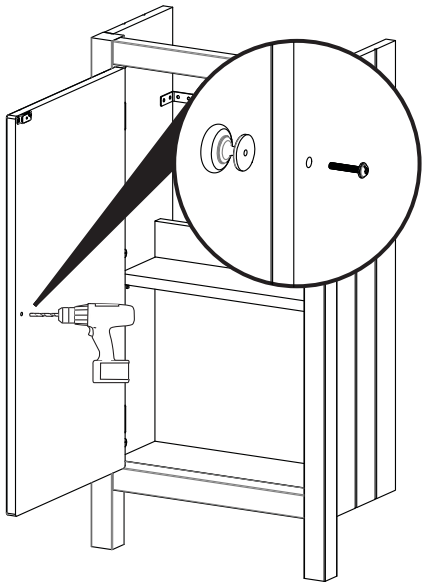

1 Fix rubber pads onto the base of the legs by pealing away the sticky cover and pressing into place.
Place the unit in it's required position, use a spirit level to make sure it is level and plumb. Fix the unit in place using suitable wall fixings (not supplied), screw through the L-shape brackets to secure the unit to the wall.

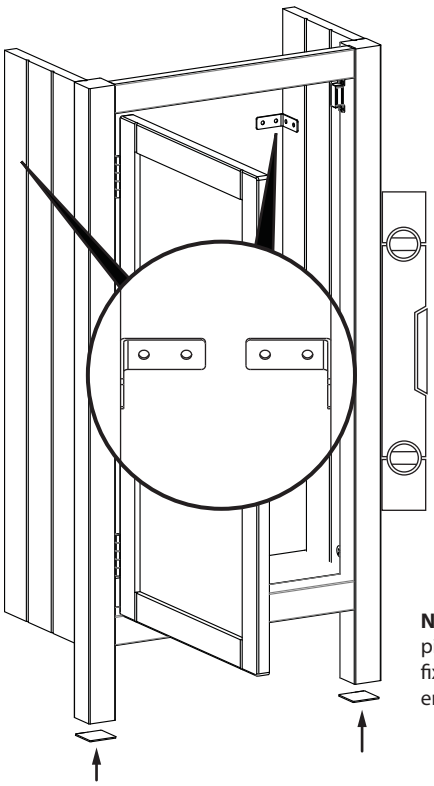

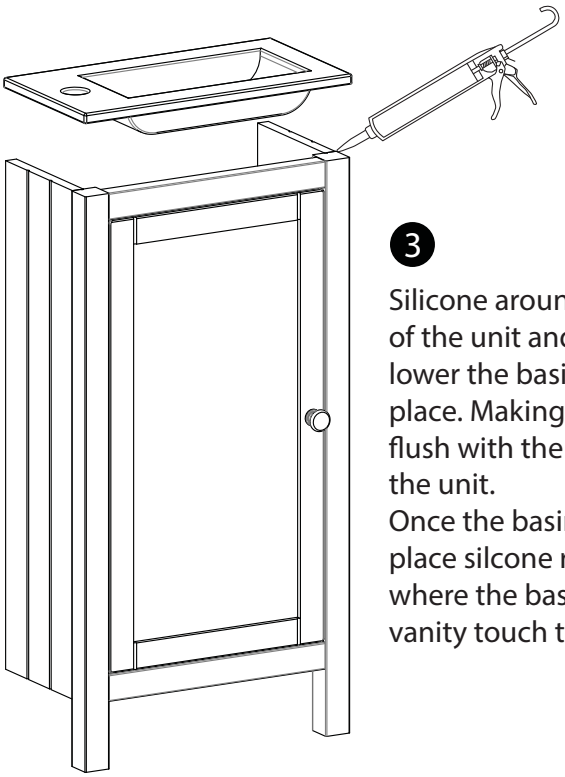

3

Silicone around the top of the unit and gently lower the basin into place. Making sure it is flush with the back of the unit.
Once the basin is in place silcone round where the basin and vanity touch the wall.

NOTE:- It is good practice to fit all pipework and plumbing before fixing the unit to the wall to enable easier intallation and fitting

Tools required (not supplied)

Cross head screwdriver

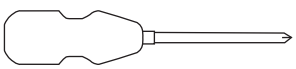

Spirit level

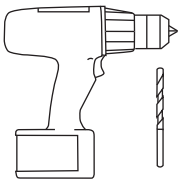

Drill and drill bits
Required when securing the cabinet to a wall.
Use an appropriate size bit to match the wall fixing chosen (wall screws and fixings not supplied)

IMPORTANT
If you are at all unsure of any part of the instructions shown in this document we recommend that you contact a reputable qualified trades person.
Product Aftercare
We recommend cleaning with a soft damp cloth and mild soap solution.
Do not use cream cleaners or cleaners containing bleach.
Do not scrub or scour.
Do not use abrasive cleaning agents.
Do not use solvent based cleaners.
If a polish is to be used, use wax free polish.
Do not allow pools of water to remain standing on the surfaces

Before you start carefully read the instructions.

Check the pack and make sure all the components are included. When you are ready to start make sure you have the right tools to hand, plenty of space and a clean dry area for building. Don't rush, read the instructions first and run through them before you begin.
Keep fittings together to avoid loss. Do not over tighten screws or bolts.
CLEANING Use mild soap and water only. Do not use washing powders or any other types of abrasive cleaner. See aftercare instructions.

STOP

If a part is missing or damaged, please call 01535 613 830. Please have your instruction guide ready.